AP... 1604... Inserts | Pastilhas | Plaquitas

APKT 1604... - MP

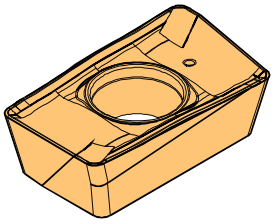

APKT 1604... - X1

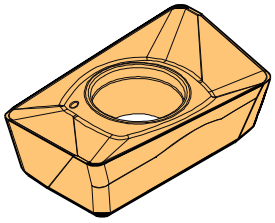

APKT 1604... - X28

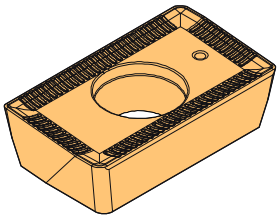

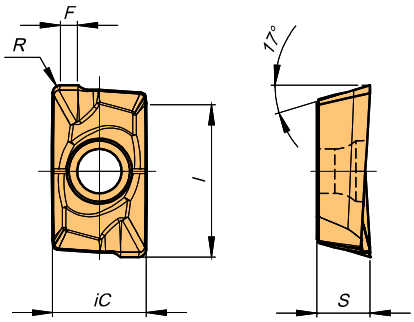

APKT 1604... - X

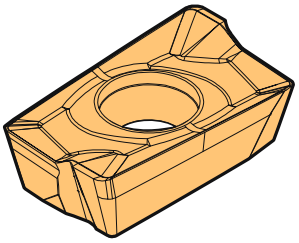

AP... - LN

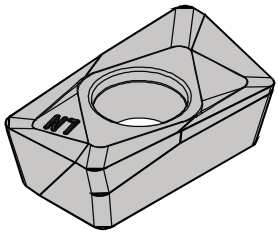

		Grades																												
		P							M			K							N		S			H					
	(2) Grade Code	M6	54	68	66	78	86	I5	68	66	I5	54	68	P3	66	D2	67	I5	10	D6	P3	G6	I5	M6	D4	Dimensions (mm)				
(1) Geometry Code	ISO Ref.	PH6103	PH6910	PH6920	PH6930	PH6125	PH6135	PH6740	PH6920	PH6930	PH6740	PH6910	PH6920	PH7930	PH6930	PH6705	PH6325	PH6740	PH0910	PDP410	PH7930	PH7740	PH6740	PH6103	PBH910	iC	S	l	R	F
1111922	APKT 160408 PDSR-MP			○									○													9,45	5,35	16,0	0,8	1,8
1112159	APKT 160408 PDER-X1			⊛	⊛					⊛			⊛		⊛											9,45	5,35	16,0	0,8	1,8
1112158	APKT 160408 PDSR-X1			⊛	⊛								⊛		⊛											9,45	5,35	16,0	0,8	1,8
1112056	APKT 1604 PDSR-X28			○						○			○													9,45	4,76	16,9	0,8	1,4
1111074	APKT 160416 PDER-X			⊛									⊛													9,45	5,35	16,0	1,6	1,20
1111050	APKT 160416 PDSR-X			⊛	⊛								⊛		⊛											9,45	5,35	16,0	1,6	1,20
1110988	APKT 160416 PDTR-X			⊛									⊛													9,45	5,35	16,0	1,6	1,20
1111075	APKT 160432 PDER-X			⊛									⊛													9,45	5,35	16,0	3,2	-
1111052	APKT 160432 PDSR-X			⊛									⊛													9,45	5,35	16,0	3,2	-
1111051	APKT 160432 PDTR-X			⊛									⊛													9,45	5,35	16,0	3,2	-
1111924	APHT 1604 PDFR-LN																		⊛							9,45	5,35	16,0	-	1,74
1111923	APKT 160408 PDFR-LN																		⊛							9,45	5,35	16,0	-	1,74

⊛ First choice / 1ª escolha / 1ª opción ⊛ Stock items / Itens de stock ○ Available under request / Disponibilidade sob consulta / Disponible bajo consulta

Insert Order Code = (1) Geometry Code + (2) Grade Code

LINEPro 18090 Milling Tool | Ferramenta | Herramienta

Rec. Cutting Conditions

ISO	PSM	Material	HB (Brinell) / Grade	Vc (m/min) ← Wear Resistance				Toughness →
				PH0910	PH6920	PH6930	PH6125	PH6135
P	1	Unalloyed steel	125-220	-	150-230	150-180	160-190	150-180
	2	Low-alloyed steel	220-280	-	140-220	140-170	140-180	140-170
	3	High-alloy steel	280-380	-	130-180	120-150	130-160	120-150
M	4	SS - Ferritic/martensitic	200-330	-	-	90-150	-	-
	5	SS - Austenitic	200-330	-	-	80-130	-	-
	6	SS - Austetenitic-ferretic (Duplex)	230-260	-	-	70-100	-	-
K	7	Malleable cast iron	130-230	-	150-280	80-230	-	-
	8	Grey cast iron	180-245	-	130-230	120-225	-	-
	9	Nodular cast iron	160-250	-	80-190	80-180	-	-
N	10	Aluminium and Non Ferrous	30-130	350-1400	-	-	-	-

(Note 1) Cutting conditions a_e/Dc=70%.

(Note 2) Cutting conditions for slotting and shouldering operations:

Operation	a_e	V_c & f_z	a_p (mm)
Slotting	100%	< 20%	5.0 - 6.0
Shouldering	< 50%	> 8%	6.0 - 9.0
	≤ 25%	> 12%	10.0 - 12.5

(Note 3) Cutting conditions should be ajusted according to the machine and work rigidity.

(Note 4) It's possible to occur vibrations in certain cases. Please reduce depth of cut and / or reduce cutting conditions in following cases:

- When using long shank;
- When using long tool overhang with arbor type;
- When application has poor clamping rigidity or when using a low rigidity machine.

Chip-Breaker Application

ISO	PSM	Material	HB (Brinell)	Chip Breaker Application	
				1st choice	Difficult Operations
P	1	Unalloyed steel	125-220	APKT 16… PDER-X	APKT 16… PDTR-X
	2	Low-alloyed steel	220-280	APKT 16… PDTR-X	-
	3	High-alloy steel	280-380	APKT 16… PDSR-X	-
M	4	SS - Ferritic/martensitic	200-330	APKT 16… PDER-X	-
	5	SS - Austenitic	200-330	APKT 16… PDER-X	-
	6	SS - Austetenitic-ferretic (Duplex)	230-260	APKT 16… PDSR-X	-
K	7	Malleable cast iron	130-230	APKT 16… PDTR-X	APKT 16… PDSR-X
	8	Grey cast iron	180-245	APKT 16… PDSR-X	-
	9	Nodular cast iron	160-250	APKT 16… PDSR-X	-
N	10	Aluminium and Non Ferrous	30-130	AP...T 16... PDFR-LN	APHT 16... PDFR-LN

LINEPro 18090 Milling Tool | Ferramenta | Herramienta

Feed f_z (mm/t)		
APKT 16... PDER-X/X1	APKT 16... PDS(T)R-X/X1	AP...T 16... PDFR-LN
0,07-0,15 0,07-0,10 0,07-0,10	0,10-0,25 0,10-0,20 0,10-0,20	- - -
0,07-0,10 0,07-0,10 0,07-0,10	- - -	- - -
0,07-0,15 0,07-0,15 -	0,10-0,25 0,10-0,25 0,10-0,20	- - -
-	-	0,07-0,20

Ramping and Helical Interpolation

Ramping

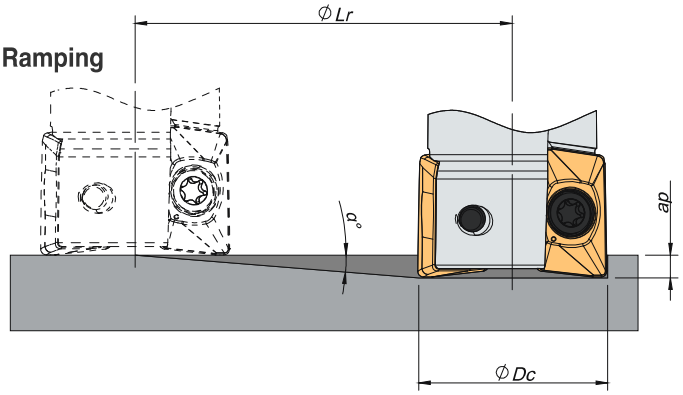

Helical Interpolation

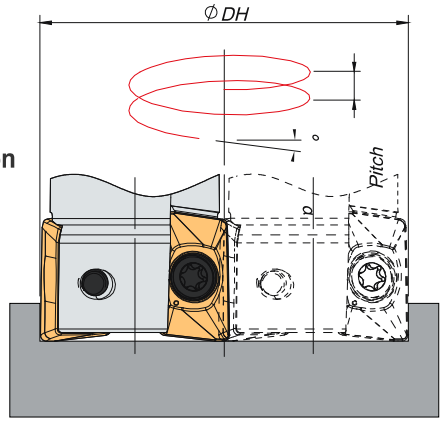

$Ød_i$ = ØDH - ØDc

ØDc	Ramping			Helical Interpolation		
				Diameter for Blind Hole, Flat Bottom Face (1)		Max Pitch/Rev.
	Max Ramp α°	Max a_p	Min Lr	$ØDH_{min}$	$ØDH_{max}$	
25	3	14,5	276,7	46,1 -	- 48,4	3,5 3,9
32	2	14,5	415,2	60,1 -	- 62,4	3,1 3,3
40	1,5	14,5	553,7	76,1 -	- 78,4	3,0 3,2
50	1,1	14,5	755,2	96,1 -	- 98,4	2,8 2,9
63	0,85	14,5	977,3	122,1 -	- 124,4	2,8 2,9
80	0,64	14,5	1298,1	156,1 -	- 158,4	2,7 2,7
100	0,5	14,5	1661,5	196,1 -	- 198,4	2,6 2,7
125	0,38	14,5	2186,3	246,1	- 248,4	2,5 2,6

(1) Using insert radius 0,8mm

Note: During helical interpolation do not exceed max Pitch.

When using different insert radius to calculate the ØDHmin and ØDHmax use the below equation:

- Minimum Diameter: ØDHmin = 2 x (ØDc - (R corner radius + F width of edge wiper))
- Maximum Diameter: ØDHmax = 2 x (ØDc - R corner radius)