SPARE PARTS | Complementos | Repuestos

Order separately

Cutter ØDc	Insert Screw	Key (Torx)	Key (Torx - Nm)	Torque Value
W17090 - 16-25	P0250503	XT08	DT0812	1,2
R17090 - 16-25	P0250503	XT08	DT0812	1,2
A17090 - 40-63	P0250503	XT08	DT0812	1,2

Note: The toolholder is supplied with the XT/PT key. To order the DT key please check the page A-243.
Check the procedures for the clamping screws on the page A-243.

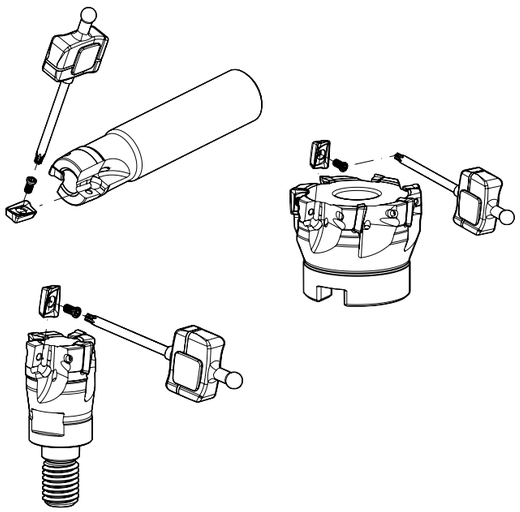

GRADES SELECTION GUIDE | Guia para selecção de graus | Tabla para selección de calidades

ISO	PSM	Material	HB (Brinell)	Grades ← Wear Resistance		Toughness →
				PH0910	PH6920	PH6930
P	1	Unalloyed Steel	125-220		✓	✓
	2	Low-Alloyed Steel	220-280		✓	✓
	3	High-Alloyed Steel	280-380		✓	✓
M	4	SS - Ferritic / Martensitic	200-330			✓
	5	SS - Austenitic	200-330			✓
	6	SS - Austenitic-ferritic (Duplex)	230-260			✓
K	7	Malleable Cast Iron	130-230		✓	✓
	8	Grey Cast Iron	180-245		✓	✓
	9	Nodular Cast iron	160-250		✓	✓
N	10	Aluminium and Non Ferrous	30-130	✓		

Good Conditions
Average Conditions
Difficult Conditions

CHIP-BREAKER SELECTION GUIDE | Guia para aplicações do quebra-aparas | Guía para aplicación del rompevirutas

ISO	PSM	Material	HB (Brinell)	Chip-Breaker Application	
				1st choise	Dificult Operations
P	1	Unalloyed Steel	125-220	APKT 10... PDER-X	APKT 10... PDTR-X
	2	Low-Alloyed Steel	220-280	APKT 10... PDSR-X	APKT 10... PDSR-X
	3	High-Alloyed Steel	280-380	APKT 10... PDSR-X	-
M	4	SS - Ferritic / Martensitic	200-330	APKT 10... PDER-X	-
	5	SS - Austenitic	200-330	APKT 10... PDER-X	-
	6	SS - Austenitic-ferritic (Duplex)	230-260	APKT 10... PDER-X	-
K	7	Malleable Cast Iron	130-230	APKT 10... PDER-X	APKT 10... PDSR-X
	8	Grey Cast Iron	180-245	APKT 10... PDSR-X	-
	9	Nodular Cast iron	160-250	APKT 10... PDSR-X	-
N	10	Aluminium and Non Ferrous	30-130	APET 10... PDFR-LN	-

RAMPING AND HELICAL INTERPOLATION

Descida em rampa e interpolação helicoidal | Bajada en rampa e interpolación circular

Ramping

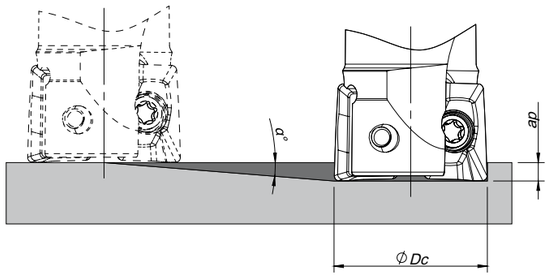

Helical Interpolation

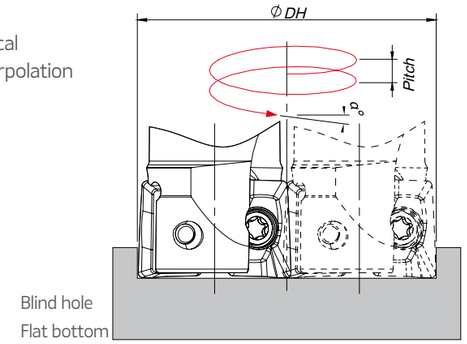

Blind hole
Flat bottom

Ødi = ØDH - ØDc

ØDc	Ramping			Helical Interpolation		
				Diameter for Blind Hole, Flat Bottom Face (1)		Max Pitch/Rev.
	Max Ramp a°	Max a_p	Min Lr	ØDHmin	ØDHmax	
16	1,3	9,0	396,6	29,2 -	- 31,0	0,9 1,1
20	0,9	9,0	572,9	37,2 -	- 39,0	0,8 0,9
25	0,6	9,0	859,4	47,2 -	- 49,0	0,7 0,8
40	0,4	9,0	1289,1	77,2 -	- 79,0	0,8 0,9
50	0,25	9,0	2062,6	97,2 -	- 99,0	0,6 0,7
63	0,2	9,0	2578,3	123,2 -	- 125,0	0,7 0,7

(1) using LP insert with radius 0,8 mm
Note: During helical interpolation do not exceed maximum pitch
When using HF insert or other different insert radius to calculate the ØDHmin and ØDHmax use the equation below:
- Minimum Diameter: ØDHmin = 2 x (ØDc - (R corner radius + F width of edge wiper))
- Maximum Diameter: ØDHmax = 2 x (ØDc - R corner radius)