GRADES SELECTION GUIDE | Guia para selecção de graus | Tabla para selección de calidades

ISO	PSM	Material	HB (Brinell)	Grades ← Wear Resistance				Toughness →	
				PH0910	PH5705	PH7920	PH5740	PHS740	PH7740
P	1	Unalloyed Steel	125-220			✓		✓	✓
	2	Low-Alloyed Steel	220-280			✓		✓	✓
	3	High-Alloyed Steel	280-380			✓		✓	✓
M	4	SS - Ferritic / Martensitic	200-330						✓
	5	SS - Austenitic	200-330						✓
	6	SS - Austenitic-ferritic (Duplex)	230-260						✓
K	7	Malleable Cast Iron	130-230		✓	✓	✓		✓
	8	Grey Cast Iron	180-245		✓	✓	✓		✓
	9	Nodular Cast iron	160-250		✓	✓	✓		✓
N	10	Aluminium and Non Ferrous	30-130	✓					
S	11	Heat Resistant Super Alloys	200-320						✓

Good Conditions
Average Conditions
Difficult Conditions

CHIP-BREAKER SELECTION GUIDE | Guia para aplicações do quebra-aparas | Guía para aplicación del rompevirutas

ISO	PSM	Material	HB (Brinell)	Chip-Breaker Application	
				1st choise	Dificult Operations
P	1	Unalloyed Steel	125-220	XPET 17 ... LP	XPET 17 ... MP
	2	Low-Alloyed Steel	220-280	XPET 17 ... LP	XPET 17 ... MP
	3	High-Alloyed Steel	280-380	XPET 17 ... MP	-
M	4	SS - Ferritic / Martensitic	200-330	XPET 17 ... LP	-
	5	SS - Austenitic	200-330	XPET 17 ... LP	-
	6	SS - Austenitic-ferritic (Duplex)	230-260	XPET 17 ... LP	-
K	7	Malleable Cast Iron	130-230	XPET 17 ... LP	XPET 17 ... MP
	8	Grey Cast Iron	180-245	XPET 17 ... MP	-
	9	Nodular Cast iron	160-250	XPET 17 ... MP	-
N	10	Aluminium and Non Ferrous	30-130	XPET 17 ... LN	-
S	11	Heat Resistant Super Alloys	200-320	XPET 17 ... LP	-

RECOMMENDED CUTTING CONDITIONS | Condições de corte recomendadas | Condiciones de corte recomendables

ISO	PSM	Material	HB (Brinell)	Vc (m/min) ← Wear Resistance			Vc (m/min) Toughness →			Feed fz (mm/t)		
				PH0910	PH5705	PH7920	PH5740	PHS740	PH7740	XPET 17... LP	XPET 17... MP	XPET 17... LN
P	1	Unalloyed Steel	125-220	-	-	160-280	-	140-220	140-220	0,10-0,35	0,10-0,35	-
	2	Low-Alloyed Steel	220-280	-	-	150-230	-	130-180	130-180	0,10-0,35	0,10-0,35	-
	3	High-Alloyed Steel	280-380	-	-	140-190	-	100-170	100-170	0,10-0,30	0,10-0,30	-
M	4	SS - Ferritic / Martensitic	200-330	-	-	-	-	-	130-220	0,10-0,30	0,10-0,30	-
	5	SS - Austenitic	200-330	-	-	-	-	-	120-180	0,10-0,30	0,10-0,30	-
	6	SS - Austenitic-ferritic (Duplex)	230-260	-	-	-	-	-	70-140	0,10-0,25	0,10-0,25	-
K	7	Malleable Cast Iron	130-230	-	160-380	160-350	150-300	-	140-260	0,10-0,35	0,10-0,35	-
	8	Grey Cast Iron	180-245	-	150-320	150-300	140-250	-	130-220	0,10-0,35	0,10-0,35	-
	9	Nodular Cast iron	160-250	-	120-280	120-260	120-220	-	100-180	0,10-0,30	0,10-0,30	-
N	10	Aluminium and Non Ferrous	30-130	350-1400	-	-	-	-	-	-	-	0,10-0,35
S	11	Heat Resistant Super Alloys	200-320	-	-	-	-	-	30-65	0,10-0,20	-	-

(Note 1) Cutting conditions ae/DC=70%
(Note 2) Cutting conditions should be ajusted according to the machine and work rigidity.
(Note 3):

Operation	a_e	Vc & fz	a_p (mm)
Slotting	100%	<20%	2,0-6,0
Shouldering	<50%	>8%	7,0-13,0
	≤25%	>12%	13,0-16,0

(Note 4) It's possible to occur vibrations in certain cases.
Please reduce depth of cut and / or reduce cutting conditions in following cases:
- When using long shank;
- When using long tool overhang with arbor type;
- When application has poor clamping rigidity or when using a low rigidity machine.

page A-236 page A -244

RAMPING AND HELICAL INTERPOLATION

Descida em rampa e interpolação helicoidal | Bajada en rampa e interpolación circular

Ramping

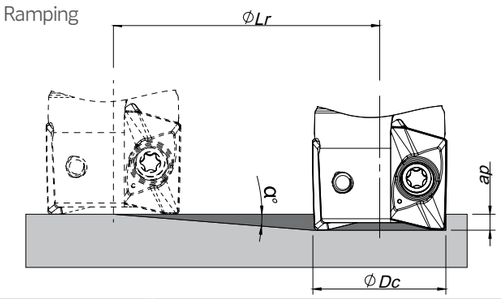

Helical Interpolation

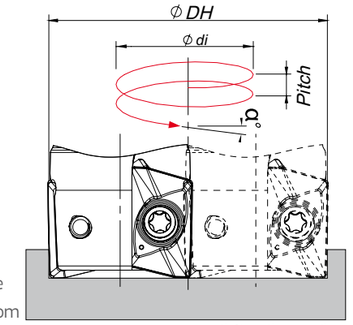

Ødi = ØDH - ØDc

ØDc	Ramping			Helical Interpolation		
				Diameter for Blind Hole, Flat Bottom Face (1)		Max Pitch/Rev.
	Max Ramp a°	Max a_p	Min Lr	ØDHmin	ØDHmax	
32	3,8	17,0	255,9	58,8 -	- 62,4	5,6 6,3
40	2,7	17,0	360,5	74,8 -	- 78,4	5,2 5,7
50	2,0	17,0	486,8	94,8 -	- 98,4	4,9 5,3
63	1,5	17,0	649,2	120,8 -	- 124,4	4,8 5,0
80	1,0	17,0	973,9	154,8 -	- 158,4	4,1 4,3
100	0,8	17,0	1217,5	194,8 -	- 198,4	4,2 4,3
125	0,7	17,0	1498,4	244,8 -	- 248,4	4,3 4,4

(1) using LP insert with radius 0,8 mm
Note: During helical interpolation do not exceed maximum pitch
When using HF insert or other different insert radius to calculate the ØDHmin and ØDHmax use the equation below:
- Minimum Diameter: ØDHmin = 2 x (ØDc - (R corner radius + F width of edge wiper))
- Maximum Diameter: ØDHmax = 2 x (ØDc - R corner radius)

page A-236 page A -244