XP... 1003... | Inserts | Pastilhas | Plaquitas

XPET-LP (PHS grade) NEW

XPET-MP (PHS grade) NEW

XPET-LN

XPET-LP | MP | LN

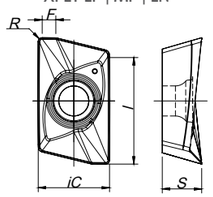

XPET-HF (HiFeed geometry)

XPET-HF

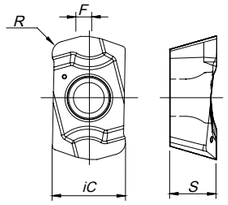

XPHW-MH (finishing geometry) NEW

XPHW-MH

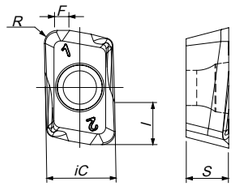

			P						M		K						N		S		H			Dimensions Dimensões Dimensiones (mm)				
			CVD	PVD					PVD		CVD		PVD				UNC	PCD	PVD		PVD	PCBN						
		(2) Grade code	T9	P7	G1	G4	P3	G6	P3	G6	L5	L9	G1	G4	P3	G6	10	D6	P3	G6	P7	S6	D4					
	(1) Geometry code	ISO Reference	PH5740	PH7603	PH7910	PH7920	PH7930	PH7740	PH7930	PH7740	PH5705	PH5740	PH7910	PH7920	PH7930	PH7740	PH0910	PDP410	PH7930	PH7740	PH7603	PBL603	PBH910	iC	S	l	R	F
	1111980	XPET 100304 PDER-LP				●	◉		●					●	◉				●					6,95	3,96	10,50	0,40	1,20
NEW	1111981	XPET 100308 PDER-LP	◉			●	◉		●					●	◉				●					6,95	3,96	10,50	0,80	1,40
	1112022	XPET 100316 PDER-LP				●	◉		●					●	◉				●					6,95	3,96	10,50	1,60	0,50
	1111982	XPET 100304 PDSR-MP			◉	●	◉		●		●	◉	◉	◉	◉									6,95	3,96	10,50	0,40	1,20
NEW	1111983	XPET 100308 PDSR-MP	◉		◉	●	◉		●		●	◉	◉	◉	◉									6,95	3,96	10,50	0,80	1,40
	1111984	XPET 100304 PDFR-LN															●							6,95	3,96	10,50	0,40	1,20
	1111985	XPET 100312 PDFR-LN															●							6,95	3,96	10,50	1,20	0,90
	1112376	XPET 100312 ZDR-HF			◉	●	◉		●				◉	●	◉				●					6,95	3,96	-	1,20	0,80
NEW	1112500	XPHW 100308 ZER-MH		◉	●																●		○	6,95	3,60	3,00	0,80	1,50
NEW	1112736	XPHW 100310 ZER-MH		○	○																○		○	6,95	3,60	3,00	1,00	1,30
NEW	1112735	XPHW 100320 ZER-MH		○	○																○		○	6,95	3,60	3,00	1,20	1,10

● First choice | Primeira opção | 1ª opción ◉ Stock item | Produto de stock | Itens de stock ○ Available under request (see page A-7) | Disponível sobre consulta (consulte a página A-7) | Disponible bajo consulta (mire pagina A-7)

Insert order code = (1) Geometry Code + (2) Grade Code

PROGRAMMING DATA | Dados para programação | Datos para la programación

Insert	Programming Data		
	Rp	X	b
XPET 10 HF	1,6	0,33	3,45

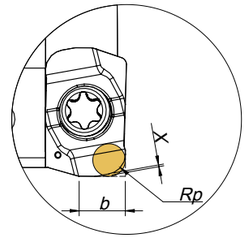

RAMPING AND HELICAL INTERPOLATION

Descida em rampa e interpolação helicoidal | Bajada en rampa e interpolación circular

Ramping

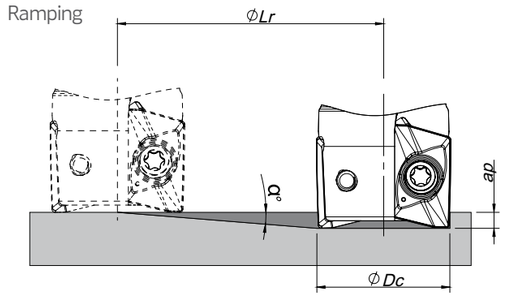

Helical Interpolation

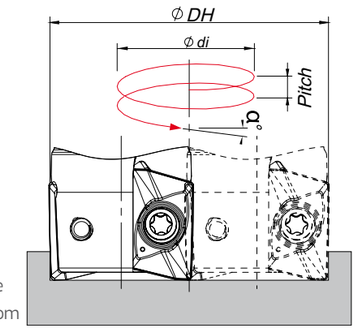

Blind hole
Flat bottom

Ødi = ØDH - ØDc

ØDc	Ramping			Helical Interpolation		
				Diameter for Blind Hole, Flat Bottom Face (1)		Max Pitch/Rev.
	Max Ramp a°	Max ap	Min Lr	ØDHmin	ØDHmax	
16	7,5	10,0	76,0	27,6 -	- 30,4	4,8 6,0
17	7,0	10,0	81,4	29,6 -	- 32,4	4,9 5,9
20	5,0	10,0	114,3	35,6 -	- 38,4	4,3 5,1
22	4,5	10,0	127,1	39,6 -	- 42,4	4,3 5,0
25	3,5	10,0	163,5	45,6 -	- 48,4	4,0 4,5
27	3,0	10,0	190,8	49,6 -	- 52,4	3,7 4,2
32	2,5	10,0	229,0	59,6 -	- 62,4	3,8 4,2
40	1,7	10,0	336,9	75,6 -	- 78,4	3,3 3,6
50	1,3	10,0	440,7	95,6 -	- 98,4	3,2 3,4
63	1,0	10,0	572,9	121,6 -	- 124,4	3,2 3,4

(1) using LP insert with radius 0,8 mm

Note: During helical interpolation do not exceed maximum pitch
When using HF insert or other different insert radius to calculate the ØDHmin and ØDHmax use the equation below:
- Minimum Diameter: ØDHmin = 2 x (ØDc - (R corner radius + F width of edge wiper))
- Maximum Diameter: ØDHmax = 2 x (ØDc - R corner radius)