CHIP-BREAKER SELECTION GUIDE | Guia para aplicações do quebra-aparas | Guía para aplicación del rompevirutas

ISO	PSM	Material	HB (Brinell)	Chip-Breaker Application	
				1st choise	Dificult Operations
P	1	Unalloyed Steel	125-220	XPET 06... LP	XPHW 06... MH
	2	Low-Alloyed Steel	220-280	XPET 06... LP	XPHW 06... MH
	3	High-Alloyed Steel	280-380	XPET 06... LP	XPHW 06... MH
M	4	SS - Ferritic / Martensitic	200-330	XPET 06... LP	-
	5	SS - Austenitic	200-330	XPET 06... LP	-
	6	SS - Austenitic-ferritic (Duplex)	230-260	XPET 06... LP	-
K	7	Malleable Cast Iron	130-230	XPET 06... LP	-
	8	Grey Cast Iron	180-245	XPET 06... LP	-
	9	Nodular Cast iron	160-250	XPET 06... LP	-
N	10	Aluminium and Non Ferrous	30-130	XPET 06... LN	-
S	11	Heat Resistant Super Alloys	200-320	XPET 06... LP	-
H	12	Hardened Steels	40-55 HRC	XPHW 06... MH	-

PROGRAMMING DATA | Dados para programação | Datos para la programación

Insert	Programming Data		
	Rp	X	b
XPET 06 HF	1,1	0,84	2,3

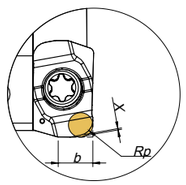

RAMPING AND HELICAL INTERPOLATION

Descida em rampa e interpolação helicoidal | Bajada en rampa e interpolación circular

Ramping

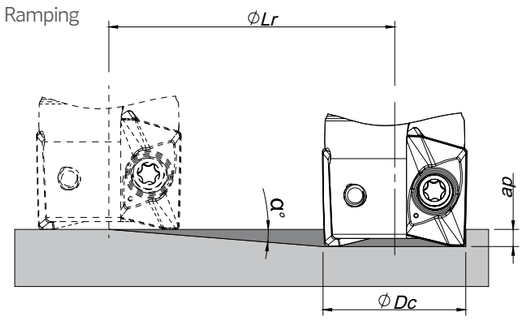

Helical Interpolation

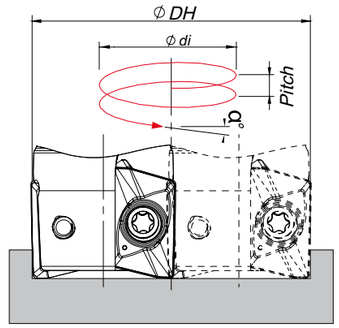

Blind hole
Flat bottom

Ødi = ØDH - ØDc

ØDc	Ramping			Helical Interpolation		
				Diameter for Blind Hole, Flat Bottom Face (1)		Max Pitch/Rev.
	Max Ramp a°	Max ap	Min Lr	ØDHmin	ØDHmax	
10	5,5	4,0	41,5	17,2 -	- 18,4	2,2 2,5
12	4,0	4,0	57,2	21,2 -	- 22,4	2,0 2,3
16	2,5	4,0	91,6	29,2 -	- 30,4	1,8 2,0
17	2,2	4,0	104,1	31,2 -	- 32,4	1,7 1,9
20	1,9	4,0	120,6	37,2 -	- 38,4	1,8 1,9
21	1,6	4,0	143,2	39,2 -	- 40,4	1,6 1,7
25	1,3	4,0	171,0	47,2 -	- 48,4	1,6 1,7
32	1,0	4,0	229,2	61,2 -	- 62,4	1,6 1,7

(1) using LP insert with radius 0,8 mm

Note: During helical interpolation do not exceed maximum pitch

When using HF insert or other different insert radius to calculate the ØDHmin and ØDHmax use the equation below:
- Minimum Diameter: ØDHmin = 2 x (ØDc - (R corner radius + F width of edge wiper)
- Maximum Diameter: ØDHmax = 2 x (ØDc - R corner radius)
(On HF insert the corner radius should be corner radius programming)

A
MILLING
Overview
Face milling
Hifeed milling
Shoulder milling
Profile milling
Hardmill
Center & Chamfer
Spot face
End Mills
Spare parts
Technical Data