HIFEED 06815

CHIP-BREAKER SELECTION GUIDE | Guia para aplicações do quebra-aparas | Guía para aplicación del rompevirutas

ISO	PSM	Material	HB (Brinell)	Chip-Breaker Application	
				1st choise	Dificult Operations
P	1	Unalloyed Steel	125-220	SOET 16...	SOEW 16...
	2	Low-Alloyed Steel	220-280	SOEW 16...	-
	3	High-Alloyed Steel	280-380	SOEW 16...	-
M	4	SS - Ferritic / Martensitic	200-330	SOET 16...	-
	5	SS - Austenitic	200-330	SOET 16...	-
	6	SS - Austenitic-ferritic (Duplex)	230-260	SOET 16...	-
K	7	Malleable Cast Iron	130-230	SOET 16...	SOEW 16...
	8	Grey Cast Iron	180-245	SOEW 16...	-
	9	Nodular Cast iron	160-250	SOEW 16...	-
S	11	Heat Resistant Super Alloys	200-320	SOET 16...	-

PROGRAMMING DATA | Dados para programação | Datos para la programación

Insert	Programming Data			
	Rp	X	b	a_e
SO... 1605..	4,5	2,3	13,5	12,8

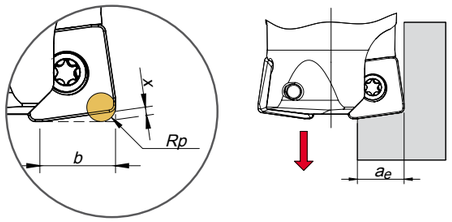

RAMPING AND HELICAL INTERPOLATION

Descida em rampa e interpolação helicoidal | Bajada en rampa e interpolación circular

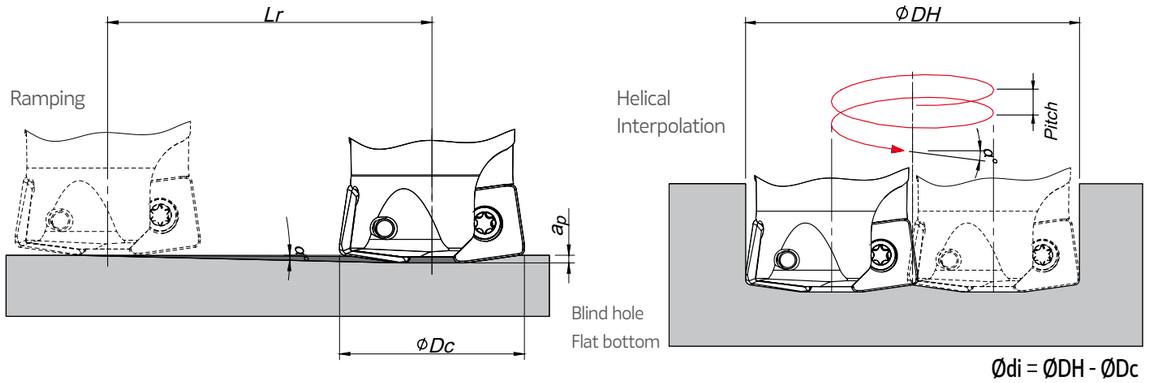

Ødi = ØDH - ØDc

ØDc	Ramping			Helical Interpolation		
	Max Ramp a°	Max ap	Min Lr	ØDHmin	ØDHmax	Max Pitch/Rev.
63	3,5	3,5	80,2	99,0 -	- 123,6	6 11
66	3,0	3,5	66,8	105 -	- 129,6	6 10
80	2,0	3,5	100,2	133 -	- 157,5	5 8
100	1,5	3,5	133,7	173 -	- 197,5	6 8
125	1,0	3,5	200,5	223 -	- 247,5	5 6
160	0,5	3,5	401,1	293 -	- 317,5	3 4

Note: During helical interpolation do not exceed max Pitch.

PLUNGING | Mergulho | Plunge

L≤3Dc	L>3Dc	S max.
fz (mm/t)		
0,10-0,20	0,07-0,14	Smax = $\sqrt{DC.DR-DR^2}$

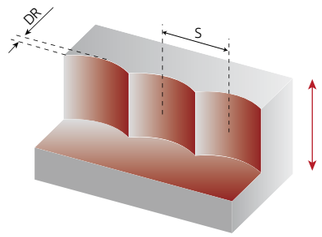

S max and DR corrsponding cutting diameter Dc (mm)		
DR (mm)	Dc (mm)	
	66	80
1,0	8,1	8,9
2,0	11,3	12,5
3,0	13,7	15,2
4,0	15,7	17,4
5,0	17,5	19,4
6,0	19,0	21,1
7,0	20,3	22,6
8,0	21,5	24,0
9,0	22,6	25,3
10,0	23,7	26,5
11,0	24,6	27,5
12,0	25,5	28,6

Note: Recommended for L ≤ 4 Dc for extra long tool this step and side cut must be reduced.