LINEPRO 40095 | 40595 | 41095

SPARE PARTS | Complementos | Repuestos

Cutter ØDc	Insert Screw	Key (Torx)	Key (Torx - Nm) (Order separately)	Torque Value	Screw Clamp (Order separately)
R41095 – 10 - 12	P0180401	XT06	DT0606	0,6	-
R40095 – 16 - 25	P0250503	XT08	DT0812	1,2	-
R40595 – 25 - 42	P0350800	XT15	DT1530	3,0	-
C40595 – 52 - 80	P0350800	XT15	DT1530	3,0	P0350750

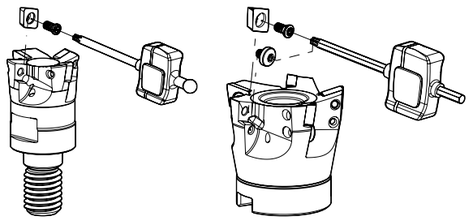

Note: The toolholder is supplied with the XT/PT key. To order the DT key please check the page A-243.
Check the procedures for the clamping screws on the page A-243.

GRADES SELECTION GUIDE | Guia para selecção de graus | Tabla para selección de calidades

ISO	PSM	Material	HB (Brinell)	Grades ← Wear Resistance Toughness → PHD103	PH6103	PH6910	PH6125	PH6135	PCD PDP410	PCBN PBH910
P	1	Unalloyed Steel	125-220		✓	✓	✓	✓		
	2	Low-Alloyed Steel	220-280		✓	✓	✓	✓		
	3	High-Alloyed Steel	280-380		✓	✓	✓	✓		
K	7	Malleable Cast Iron	130-230				✓			
	8	Grey Cast Iron	180-245				✓			
	9	Nodular Cast iron	160-250				✓			
N	10	Aluminium and Non Ferrous	30-130	✓					✓	
H	12	Hardened Steels	40-55 HRC		✓					✓

Good Conditions
Average Conditions
Difficult Conditions

RECOMMENDED CUTTING CONDITIONS | Condições de corte recomendadas | Condiciones de corte recomendables

ISO	PSM	Material	HB (Brinell)	Vc (m/min) ← Wear Resistance Toughness → PHD103	PH6103	PH6910	PH6125	PH6135	PCD PDP410	PCBN PBH910
P	1	Unalloyed Steel	125-220	-	180-300	180-250	160-190	150-180	-	-
	2	Low-Alloyed Steel	220-280	-	180-250	170-210	140-180	140-170	-	-
	3	High-Alloyed Steel	280-380	-	180-230	160-200	130-160	120-150	-	-
K	7	Malleable Cast Iron	130-230	-	-	170-300	160-290	-	-	-
	8	Grey Cast Iron	180-245	-	-	150-250	140-240	-	-	-
	9	Nodular Cast iron	160-250	-	-	90-210	80-200	-	-	-
N	10	Aluminium and Non Ferrous	30-130	300-1000	-	-	-	-	800-3000	-
H	12	Hardened Steels	40-55 HRC	-	120-260	-	-	-	-	200-600

Insert	Feed f_z (mm/t) Roughing	Finishing	a_p Rec.
XD... 04	0.10-0.20	0.10-0.15	0.1-0.5
XD... 06	0.15-0.30	0.10-0.25	0.2-0.8
XD... 10	0.15-0.35	0.10-0.30	0.2-0.8

(Note 1) Cutting conditions should be ajusted according to the machine and work rigidity.
(Note 2) If chattering occurs, reduce ap and Vc by 30% and keep the same fz per thooth

RAMPING AND HELICAL INTERPOLATION

Descida em rampa e interpolação helicoidal | Bajada en rampa e interpolación circular

Ramping

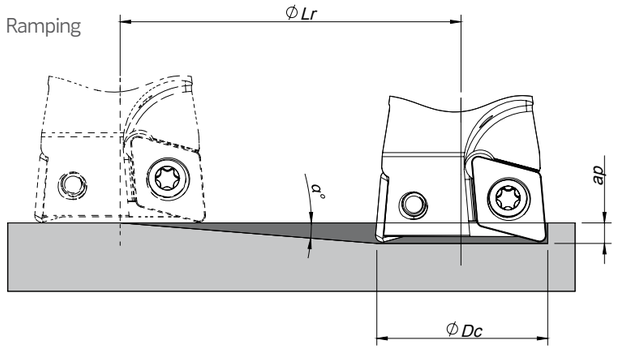

Helical Interpolation

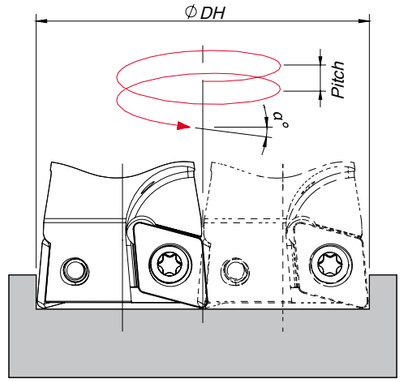

Blind hole
Flat bottom

Ødi = ØDH - ØDc

Insert	ØDc	Ramping Max Ramp a°	Max a_p	Min Lr	Helical Interpolation ØDHmin	ØDHmax	Max Pitch/Rev.
XDHW 04...	10	7,3	0,8	6,2	18,0	-	3,2
					-	20,0	4,0
	12	5,3	0,8	8,6	22,0	-	2,9
					-	24,0	3,5
XDHW 06...	16	8	1,0	7,1	30,0	-	6,2
					-	32,0	7,1
	20	5,7	1,0	10,0	38,0	-	5,6
					-	40,0	6,3
	25	4	1,0	14,3	48,0	-	5,1
					-	50,0	5,5
XDHW 10...	25	8,7	1,0	6,5	48,0	-	11,1
					-	50,0	12,0
	35	5,2	1,0	11,0	68,0	-	9,4
					-	70,0	10,0
	42	4	1,0	14,3	82,0	-	8,8
					-	84,0	9,2
	52	3	1,0	19,1	102,0	-	8,2
					-	104,0	8,6
	66	2,3	1,0	24,9	130,0	-	8,1
					-	132,0	8,3
	80	1,8	1,0	31,8	158,0	-	7,7
					-	160,0	7,9

Note: During helical interpolation do not exceed max Pitch.