RECOMMENDED CUTTING CONDITIONS | Condições de corte recomendadas | Condiciones de corte recomendables

ISO	PSM	Material	HB (Brinell)	Vc (m/min) ← Wear Resistance					Toughness →
				PH6103	PH6910	PH6920	PH6125	PH6135	PH6740
P	1	Unalloyed Steel	125-220	180-300	180-250	150-230	160-190	150-180	130-160
	2	Low-Alloyed Steel	220-280	180-250	170-210	140-220	140-180	140-170	120-150
	3	High-Alloyed Steel	280-380	180-230	160-200	130-180	130-160	120-150	100-130
K	7	Malleable Cast Iron	130-230	-	170-300	150-280	-	-	130-250
	8	Grey Cast Iron	180-245	-	150-250	130-230	-	-	110-220
	9	Nodular Cast iron	160-250	-	90-210	80-190	-	-	80-170
N	10	Aluminium and Non Ferrous	30-130	-	-	-	-	-	-
H	12	Hardened Steels	40-55 HRC	120-240	-	-	-	-	-

ISO	PSM	Material	HB (Brinell)	RD... 07		RD... 10		RD... 12	
				fz (mm/t)	ap (mm)	fz (mm/t)	ap (mm)	fz (mm/t)	ap (mm)
P	1	Unalloyed Steel	125-220	≤0,18	≤1,50	≤0,24	≤2,50	≤0,27	≤2,50
	2	Low-Alloyed Steel	220-280	≤0,18	≤1,50	≤0,24	≤2,50	≤0,25	≤2,50
	3	High-Alloyed Steel	280-380	≤0,15	≤1,50	≤0,21	≤2,50	≤0,20	≤2,50
K	7	Malleable Cast Iron	130-230	≤0,20	≤1,50	≤0,25	≤2,50	≤0,24	≤2,50
	8	Grey Cast Iron	180-245	≤0,20	≤1,50	≤0,25	≤2,50	≤0,24	≤2,50
	9	Nodular Cast iron	160-250	≤0,18	≤1,50	≤0,22	≤2,50	≤0,22	≤2,50
N	10	Aluminium and Non Ferrous	30-130	≤0,45	≤1,50	≤0,80	≤2,50	-	-
H	12	Hardened Steels	40-55 HRC	≤0,12	≤1,50	≤0,18	≤2,50	≤0,18	≤2,50

ISO	PSM	Material	HB (Brinell)	RD... 16		RD... 20	
				fz (mm/t)	ap (mm)	fz (mm/t)	ap (mm)
P	1	Unalloyed Steel	125-220	≤0,33	≤3,50	≤0,33	≤5,00
	2	Low-Alloyed Steel	220-280	≤0,33	≤3,50	≤0,33	≤5,00
	3	High-Alloyed Steel	280-380	≤0,27	≤3,50	≤0,27	≤5,00
K	7	Malleable Cast Iron	130-230	≤0,35	≤3,50	≤0,35	≤5,00
	8	Grey Cast Iron	180-245	≤0,35	≤3,50	≤0,35	≤5,00
	9	Nodular Cast iron	160-250	≤0,32	≤3,50	≤0,32	≤5,00
N	10	Aluminium and Non Ferrous	30-130	-	-	-	-
H	12	Hardened Steels	40-55 HRC	≤0,25	≤3,50	≤0,20	≤5,00

(Note 1) Cutting conditions a_e/Dc=70%.
(Note 2) Cutting conditions should be adjusted according to the machine and work rigidity.
(Note 3) It's possible to occur vibrations in certain cases. Please reduce depth of cut and / or reduce cutting conditions in following cases:
- When using long shank;
- When using long tool overhang with arbor type;
- When application has poor clamping rigidity or when using a low rigidity machine.

RAMPING AND HELICAL INTERPOLATION

Descida em rampa e interpolação helicoidal | Bajada en rampa e interpolación circular

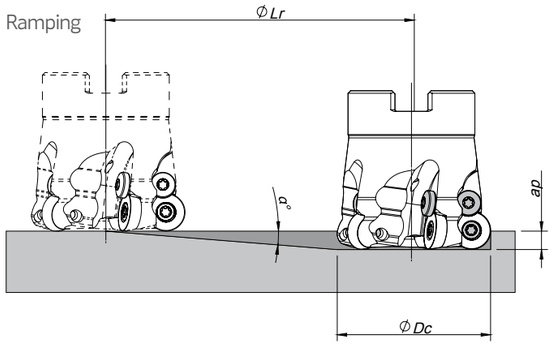

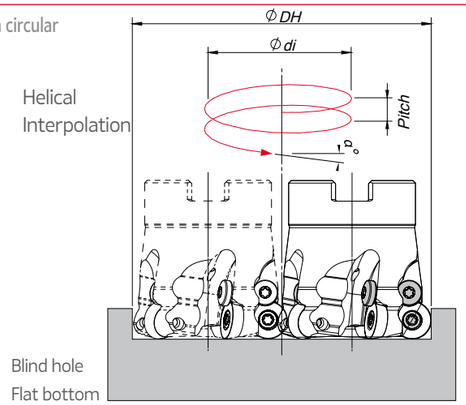

Ødi = ØDH - ØDc

Insert	ØDc	Ramping			Helical Interpolation		
		Max Ramp a°	Max a_p	Min Lr	ØDHmin	ØDHmax	Max Pitch/Rev.
RD... 07	15	9,4	3,5	21,1	23,0 -	- 30,0	4,0 7,0
	16	8	3,5	24,9	25,0 -	- 32,0	3,0 7,0
	20	6	3,5	33,3	33,0 -	- 40,0	4,0 6,0
RD... 10	20	25,0	5,0	10,7	30,0 -	- 40,0	14,0 29,0
	25	22,0	5,0	12,4	40,0 -	- 50,0	19,0 31,0
	30	13,5	5,0	20,8	50,0 -	- 60,0	15,0 22,0
	35	12,0	5,0	23,5	60,0 -	- 70,0	16,0 23,0
	42	10,0	5,0	28,4	74,0 -	- 84,0	17,0 23,0
	52	7,0	5,0	40,7	94,0 -	- 104,0	16,0 20,0
RD... 12	24	17,0	6,0	19,6	36,0 -	- 48,0	11,1 23,0
	25	16,2	6,0	20,7	38,0 -	- 50,0	11,0 22,0
	35	12,0	6,0	28,2	58,0 -	- 70,0	15,0 23,0
	42	10,3	6,0	33,0	72,0 -	- 84,0	17,0 23,0
	50	6,4	6,0	53,5	88,0 -	- 100,0	13,0 17,0
	52	6,0	6,0	57,1	92,0 -	- 104,0	13,0 17,0
	66	3,5	6,0	79,8	120,0 -	- 132,0	12,0 15,0
	80	2,5	6,0	104,1	148,0 -	- 160,0	12,0 14,0
RD... 16	32	20,0	8,0	22,0	48,0 -	- 64,0	18,0 36,0
	35	18,0	8,0	24,6	54,0 -	- 70,0	19,0 35,0
	52	13,0	8,0	34,7	88,0 -	- 104,0	26,0 37,0
	66	8,5	8,0	53,5	116,0 -	- 132,0	23,0 30,0
	80	6,0	8,0	76,1	144,0 -	- 160,0	21,0 26,0
	125	3,5	8,0	130,8	234,0 -	- 250,0	20,0 24,0
	160	2,5	8,0	183,2	304,0 -	- 320,0	19,0 21,0
RD... 20	80	6,0	10,0	76,1	140,0 -	- 160,0	19,0 26,0
	100	5,0	10,0	91,4	180,0 -	- 200,0	21,0 27,0
	125	4,5	10,0	101,6	230,0 -	- 250,0	25,0 30,0
	160	3,0	10,0	152,6	300,0 -	- 320,0	23,0 26,0

Note: During helical interpolation do not exceed max Pitch.

A
MILLING
Overview
Face milling
Hifeed milling
Shoulder milling
Profile milling
Hardmill
Center & Chamfer
Spot face
End Mills
Spare parts
Technical Data