No. 6314AV

Stepped clamp with adjusting support screw

(without clamping stud)
Painted tempered steel.

Order no.	for clamping screw	H*	sim. DIN6314 B1 x L	D x LS	A	A1xA2	B2	E1	E2	Weight [g]
74567	M12	10-55	14x100	M12x49	20	8 x10,0	40	21	40	580
74575	M16	13-62	18x125	M16x55	25	10x12,5	50	26	45	1140
74583	M20	16-77	22x160	M20x69	30	12x15,0	60	30	60	2100

*depending on depth of slot to DIN 650 and position of fixture nut.
To clamp thin parts, turn the clamp over.
Clamps without T-bolts are same item for sizes 12 and 14, 16 and 18, 20 and 22, each.

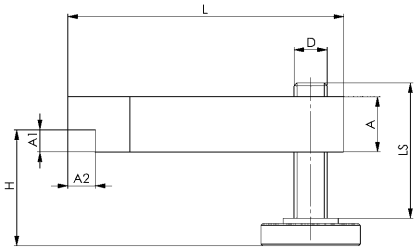

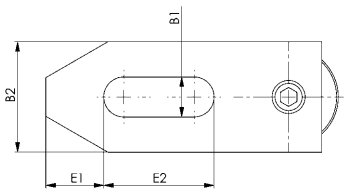

CAD

No. 6314AV

Stepped clamp with adjusting support screw, complete

with DIN 787, DIN 6340, DIN 6330B.
Painted tempered steel.

Order no.	Slot	with clamping bolt	H*	sim. DIN6314 B1 x L	D x LS	A	A1xA2	B2	E1	E2	Weight [g]
74591	12	M12x12x100	10-48	14x100	M12x49	20	8 x10,0	40	21	40	745
74625	14	M12x14x100	10-46	14x100	M12x49	20	8 x10,0	40	21	40	764
74633	16	M16x16x125	13-58	18x125	M16x55	25	10x12,5	50	26	45	1510
74641	18	M16x18x125	13-56	18x125	M16x55	25	10x12,5	50	26	45	1530
74658	20	M20x20x160	16-77	22x160	M20x69	30	12x15,0	60	30	60	2800
74666	22	M20x22x160	16-77	22x160	M20x69	30	12x15,0	60	30	60	2840

*depending on depth of slot to DIN 650 and position of fixture nut.
To clamp thin parts, turn the clamp over.
Clamps without T-bolts are same item for sizes 12 and 14, 16 and 18, 20 and 22, each.

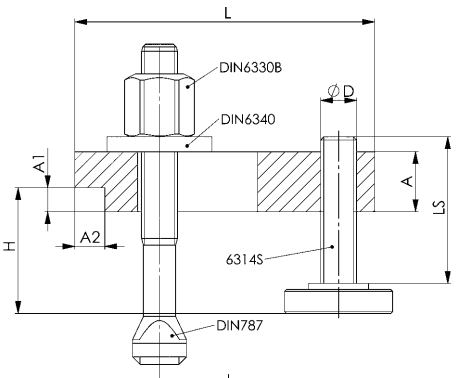

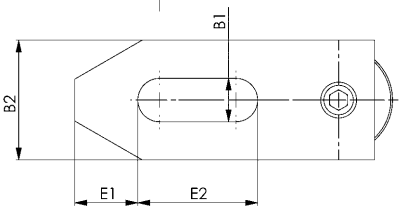

CAD

Subject to technical alterations.

ANDREAS MAIER GmbH & Co. KG · Phone: +49 711 5766-0 · Web: www.amf.de