Flexible Line Up Vice

STANDARD STYLE
4 POSITION FOR EACH ITEM.

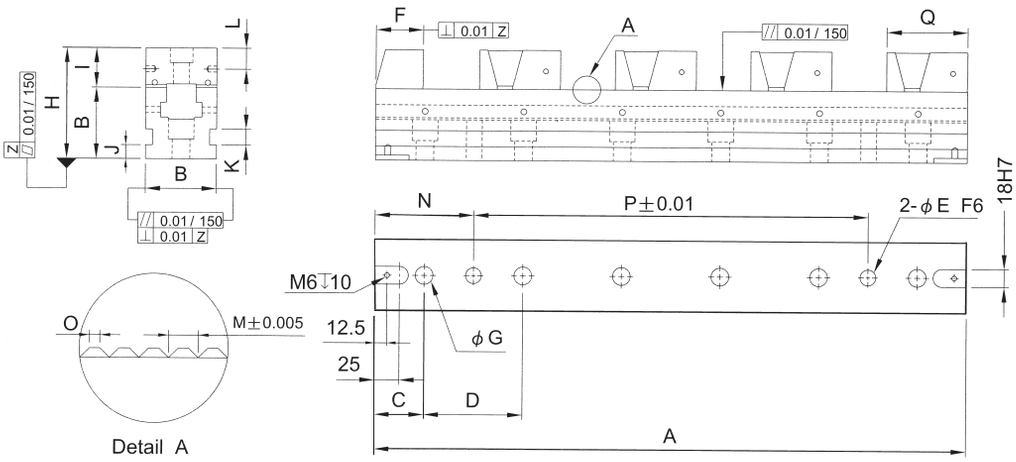

ORDER NO.	A	B±0.01	C	D	E	F	G	H	I	J	K	L	M	N	O	P	Q	KG	CODE NO.
VFS-5030	300	50	30	80	12	36	14	75	24.8	10	12	12.5	1.5	70	0.5	160	60	6.5	4007-050
VFS-5030G			50	100										100		100			4007-051
VFS-5040	400	50	40	80	12	36	14	75	24.8	10	12	12.5	1.5	80	0.5	240	60	8.5	4007-052
VFS-5040G			50	100										100		200			4007-053
VFS-5050	500	50	50	80	12	36	14	75	24.8	10	12	12.5	1.5	90	0.5	320	60	10	4007-054
VFS-5050G				100										100		300			4007-055
VFS-5060	600	50	60	80	12	36	14	75	24.8	10	12	12.5	1.5	100	0.5	400	60	11.5	4007-056
VFS-5060G			50	100															4007-057
VFS-5070	700	50	70	80	12	36	14	75	24.8	10	12	12.5	1.5	110	0.5	480	60	13	4007-058
VFS-5070G			50	100										100		500			4007-059
VFS-7240	400	72	50	100	16	48	18	110	39.7	14	16	21.3	2.0	100	0.7	200	82	19	4007-060
VFS-7250	500	72	50	100	16	48	18	110	39.7	14	16	21.3	2.0	100	0.7	300	82	25	4007-061
VFS-7260	600	72	50	100	16	48	18	110	39.7	14	16	21.3	2.0	100	0.7	400	82	27	4007-062
VFS-7270	700	72	50	100	16	48	18	110	39.7	14	16	21.3	2.0	100	0.7	500	82	30	4007-063

Material：tool steel
Hardness：over HRC55

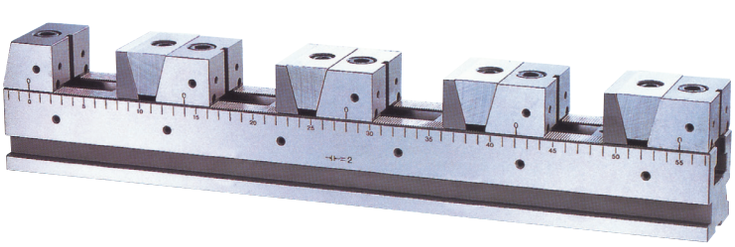

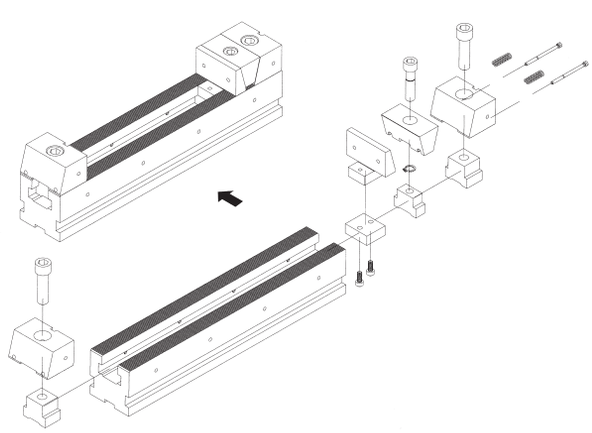

KL-TECH s.r.o. | www.klte.cz | info@klte.cz