Magnetic Sine Plate

650 GAUSS

MAGNETIC SINE PLATES with a permanent magnetic, never lose its strong power by press down a screw based on the plate and regain the original after work.

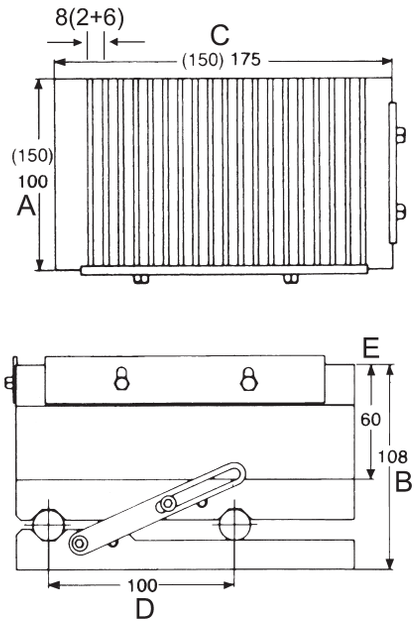

ORDER NO.	A	B	C	D	E	ANGLE	N.W (kgs)	CODE NO.
V-47M	100	108	175	75	60	0˚~45˚	11.3	2015-020
V-66M	150	108	150	100	60	0˚~45˚	15.6	2015-021
V-612M	150	108	300	100	60	0˚~45˚	27	2015-022

Magnetic Sine Plate With Fine Pole

700 GAUSS

Permanent magnetic chuck. Removable handle for positive on/off control, side rails, end rails all included. All have 200 minute angle steps with 0.005 mm(0.0002″) tolerance in squareness,parallelism and roll center distances. The chuck of pole is 1+1.5

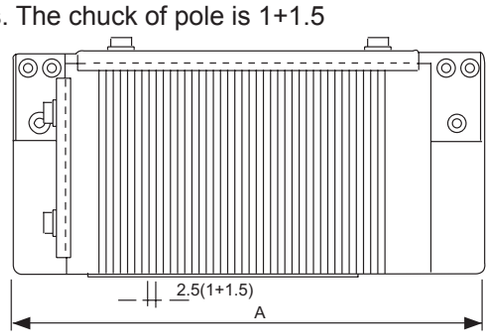

GAUGE BLOCK
page B76

SET UP EXAMPLE

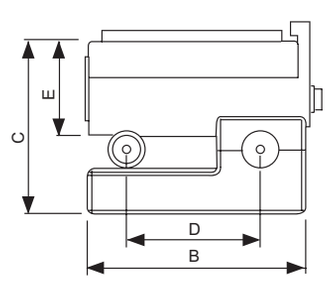

ORDER NO.	A	B	C	D	E	P	ANGLE	N.W (kgs)	CODE NO.
V-47MF	225	102	87	75	47	2.5 (1+1.5)	0˚~46˚	13.1	2015-030
V-66MF	200	152	87	100	47			16.5	2015-031
V-612MF	366	152	87	100	47			30.3	2015-032