RD... Inserts | Pastilhas | Plaquitas

RDHT

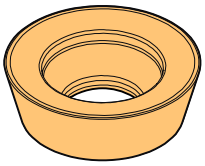

RDMW

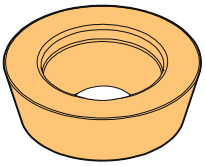

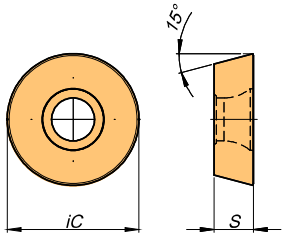

		Grades																									
		P							M			K							N		S			H		
	(2) Grade Code	M6	54	68	66	78	86	I5	68	66	I5	54	68	P3	66	D2	67	I5	10	D6	P3	G6	I5	M6	D4		
(1) Geometry Code	ISO Ref.	PH6103	PH6910	PH6920	PH6930	PH6125	PH6135	PH6740	PH6920	PH6930	PH6740	PH6910	PH6920	PH7930	PH6930	PH6705	PH6325	PH6740	PH0910	PDP410	PH7930	PH7740	PH6740	PH6103	PBH910	Dimensions (mm) iC	Dimensions (mm) S
1110548	RDHW 0702 MOT	◎	◎	⊚								◎	⊚											⊚		7,00	2,38
1110961	RDHW 0702 MOF																			○						7,00	2,38
1110087	RDHW 1003 MOT	◎	◎	⊚			◎					◎	⊚											⊚		10,00	3,18
1110962	RDHW 1003 MOF																			○						10,00	3,18
1110082	RDHT 1003 MOT					⊚	◎																			10,00	3,18
1110583	RDMT 1003 MOT					◎	◎																			10,00	3,18
1110549	RDMW 1003 MOT			⊚		◎	◎						⊚													10,00	3,18
1110090	RDHW 12T3 MOT	◎	◎	⊚			◎					◎	⊚											⊚		12,00	3,97
New 1112040	RDHT 12T3 M0S-MP			⊚			○	◎					⊚					◎								12,00	3,97
1110083	RDHT 12T3 MOT					⊚	◎																			12,00	3,97
1110558	RDMT 12T3 MOT					◎	◎																			12,00	3,97
1110096	RDMW 12T3 MOT			⊚		◎	◎						⊚													12,00	3,97
1110092	RDHW 1604 MOT	◎	◎	⊚			◎					◎	⊚											⊚		16,00	4,76
New 1112039	RDHT 1604 M0S-MP			⊚			○	◎					⊚					◎								16,00	4,76
1110084	RDHT 1604 MOT					⊚	◎																			16,00	4,76
1110556	RDMT 1604 MOT					◎	◎																			16,00	4,76
1110097	RDMW 1604 MOT			⊚		◎	◎						◎													16,00	4,76
1111217	RDHW 2006 MOT			○		○	○																			20,00	6,35
1110672	RDHT 2006 MOT					○	○																			20,00	6,35
1110659	RDMT 2006 MOT					◎	◎																			20,00	6,35
1110869	RDMW 2006 MOT			○		○	○																			20,00	6,35

⊚ First choice / 1ª escolha / 1ª opción ◎ Stock items / Itens de stock ○ Available under request / Disponibilidade sob consulta / Disponible bajo consulta

Insert Order Code = (1) Geometry Code + (2) Grade Code

ToroMILL 24590 | 25090 | 25190 25290 | 25390 Milling Tool | Ferramenta | Herramienta

Rec. Cutting Conditions

ISO	PSM	Material	HB (Brinell) / Grade	Vc (m/min) ← Wear Resistance — Toughness →						
				PH6103	PH0910	PH6910	PH6920	PH6740	PH6125	PH6135
P	1	Unalloyed steel	125-220	180-300	-	180-250	150-230	130-160	160-190	150-180
	2	Low-alloyed steel	220-280	180-250	-	170-210	140-220	120-150	140-180	140-170
	3	High-alloy steel	280-380	180-230	-	160-200	130-180	100-130	130-160	120-150
K	7	Malleable cast iron	130-230	-	-	170-300	150-280	130-250	-	-
	8	Grey cast iron	180-245	-	-	150-250	130-230	110-220	-	-
	9	Nodular cast iron	160-250	-	-	90-210	80-190	80-170	-	-
N	10	Aluminium and Non Ferrous	30-130	-	350-1000	-	-	-	-	-
H		Hardened Steels	40-55 HRC	120-240	-	-	-	-	-	-

ISO	PSM	Material	HB (Brinell)	RD... 07		RD... 10		RD... 12		RD... 16		RD... 20	
				f_z (mm/t)	a_p (mm)	f_z (mm/t)	a_p (mm)	f_z (mm/t)	a_p (mm)	f_z (mm/t)	a_p (mm)	f_z (mm/t)	a_p (mm)
P	1	Unalloyed steel	125-220	≤0,18	≤1,50	≤0,24	≤2,50	≤0,27	≤2,50	≤0,33	≤3,50	≤0,33	≤5,00
	2	Low-alloyed steel	220-280	≤0,18	≤1,50	≤0,24	≤2,50	≤0,25	≤2,50	≤0,33	≤3,50	≤0,33	≤5,00
	3	High-alloy steel	280-380	≤0,15	≤1,50	≤0,21	≤2,50	≤0,20	≤2,50	≤0,27	≤3,50	≤0,27	≤5,00
K	7	Malleable cast iron	130-230	≤0,20	≤1,50	≤0,25	≤2,50	≤0,24	≤2,50	≤0,35	≤3,50	≤0,35	≤5,00
	8	Grey cast iron	180-245	≤0,20	≤1,50	≤0,25	≤2,50	≤0,24	≤2,50	≤0,35	≤3,50	≤0,35	≤5,00
	9	Nodular cast iron	160-250	≤0,18	≤1,50	≤0,22	≤2,50	≤0,22	≤2,50	≤0,32	≤3,50	≤0,32	≤5,00
N	10	Aluminium and Non Ferrous	30-130	≤0,45	≤1,50	≤0,80	≤2,50	-	-	-	-	-	-
H		Hardened Steels	40-55 HRC	≤0,12	≤1,50	≤0,18	≤2,50	≤0,18	≤2,50	≤0,25	≤3,50	≤0,20	≤5,00

(Note 1) Cutting conditions a_e/Dc=70%.

(Note 2) Cutting conditions should be adjusted according to the machine and work rigidity.

(Note 3) It's possible to occur vibrations in certain cases. Please reduce depth of cut and / or reduce cutting conditions in following cases:

- When using long shank;
- When using long tool overhang with arbor type;
- When application has poor clamping rigidity or when using a low rigidity machine.

ToroMILL 24590 | 25090 | 25190 25290 | 25390 Milling Tool | Ferramenta | Herramienta

Chip-Breaker Application

ISO	PSM	Material	HB (Brinell)	Chip Breaker Application	
				1st choice	Difficult Operations
P	1 2 3	Unalloyed steel Low-alloyed steel High-alloy steel	125-220 220-280 280-380	RD…T … RD…T … RD…W …	RD…W … - -
K	7 8 9	Malleable cast iron Grey cast iron Nodular cast iron	130-230 180-245 160-250	RD…T … RD…W … RD…W …	RD…W … - -
N	10	Aluminium and Non Ferrous	30-130	RD…W … M0F	-
H		Hardened Steels	40-55 HRC	RD…W …	-

Feed f_z (mm/t) as per depth of cut (mm)

Insert	a_p (mm)								
	0,20-0,50	0,50-1,00	2,00	3,00	4,00	5,00	6,00	7,00	8,00
RD… 07	0,35	0,25	0,10	0,07	-	-	-	-	-
RD… 10	-	0,40	0,35	0,30	0,20	-	-	-	-
RD… 12	-	0,50	0,45	0,30	0,25	0,22	-	-	-
RD… 16	-	0,60	0,50	0,45	0,35	0,30	0,20	0,10	-
RD… 20	-	-	0,60	0,50	0,40	0,30	0,25	0,15	0,10

ToroMILL 24590 | 25090 | 25190 25290 | 25390 Milling Tool | Ferramenta | Herramienta

Ramping and Helical Interpolation

Ramping

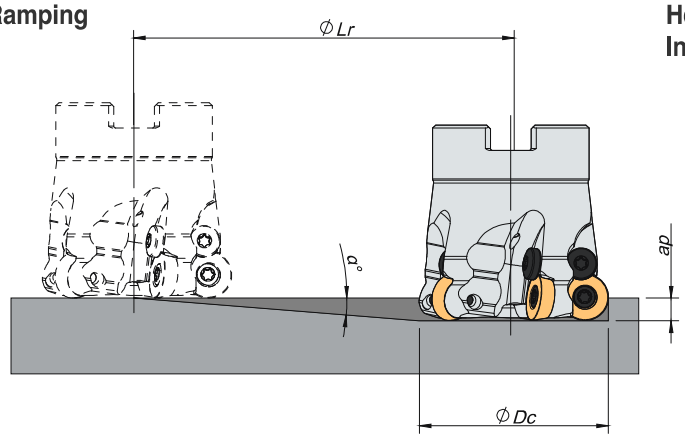

Helical Interpolation

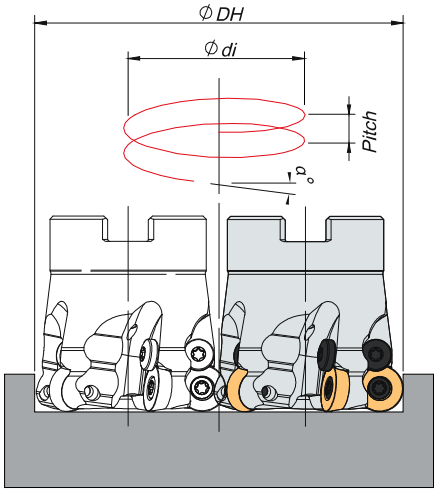

Φdi=ΦDH-ΦDc

Insert	ØDc	Ramping			Helical Interpolation		
		Max Ramp α°	Max a_p	Min Lr	$ØDH_{min}$	$ØDH_{max}$	Max Pitch/Rev.
RD… 07	15	9,4	3,5	21,1	23,0 -	- 30,0	4,0 7,0
	16	8	3,5	24,9	25,0 -	- 32,0	3,0 7,0
	20	6	3,5	33,3	33,0 -	- 40,0	4,0 6,0
RD… 10	20	25,0	5,0	10,7	30 -	- 40,0	14,0 29,0
	25	22,0	5,0	12,4	40 -	- 50,0	19,0 31,0
	30	13,5	5,0	20,8	50 -	- 60,0	15,0 22,0
	35	12,0	5,0	23,5	60 -	- 70,0	16,0 23,0
	42	10,0	5,0	28,4	74 -	- 84,0	17,0 23,0
	52	7,0	5,0	40,7	94 -	- 104,0	16,0 20,0
RD… 12	24	17,0	6,0	19,6	36,0 -	- 48,0	11,0 23,0
	25	16,2	6,0	20,7	38,0 -	- 50,0	11,0 22,0
	35	12,0	6,0	28,2	58,0 -	- 70,0	15,0 23,0
	42	10,3	6,0	33,0	72,0 -	- 84,0	17,0 23,0
	50	6,4	6,0	53,5	88,0 -	- 100,0	13,0 17,0
	52	6,0	6,0	57,1	92,0 -	- 104,0	13,0 17,0
	66	4,3	6,0	79,8	120,0 -	- 132,0	12,0 15,0
	80	3,3	6,0	104,1	148,0 -	- 160,0	12,0 14,0
RD…16	32	20,0	8,0	22,0	48,0 -	- 64,0	18,0 36,0
	35	18,0	8,0	24,6	54,0 -	- 70,0	19,0 35,0
	52	13,0	8,0	34,7	88,0 -	- 104,0	26,0 37,0
	66	8,5	8,0	53,5	116,0 -	- 132,0	23,0 30,0
	80	6,0	8,0	76,1	144,0 -	- 160,0	21,0 26,0
	125	3,5	8,0	130,8	234,0 -	- 250,0	20,0 24,0
	160	2,5	8,0	183,2	304,0 -	- 320,0	19,0 21,0
RD… 20	80	6,0	10,0	76,1	140,0 -	- 160,0	19,0 26,0
	100	5,0	10,0	91,4	180,0 -	- 200,0	21,0 27,0
	125	4,5	10,0	101,6	230,0 -	- 250,0	25,0 30,0
	160	3,0	10,0	152,6	300,0 -	- 320,0	23,0 26,0

Note: During helical interpolation do not exceed max Pitch.